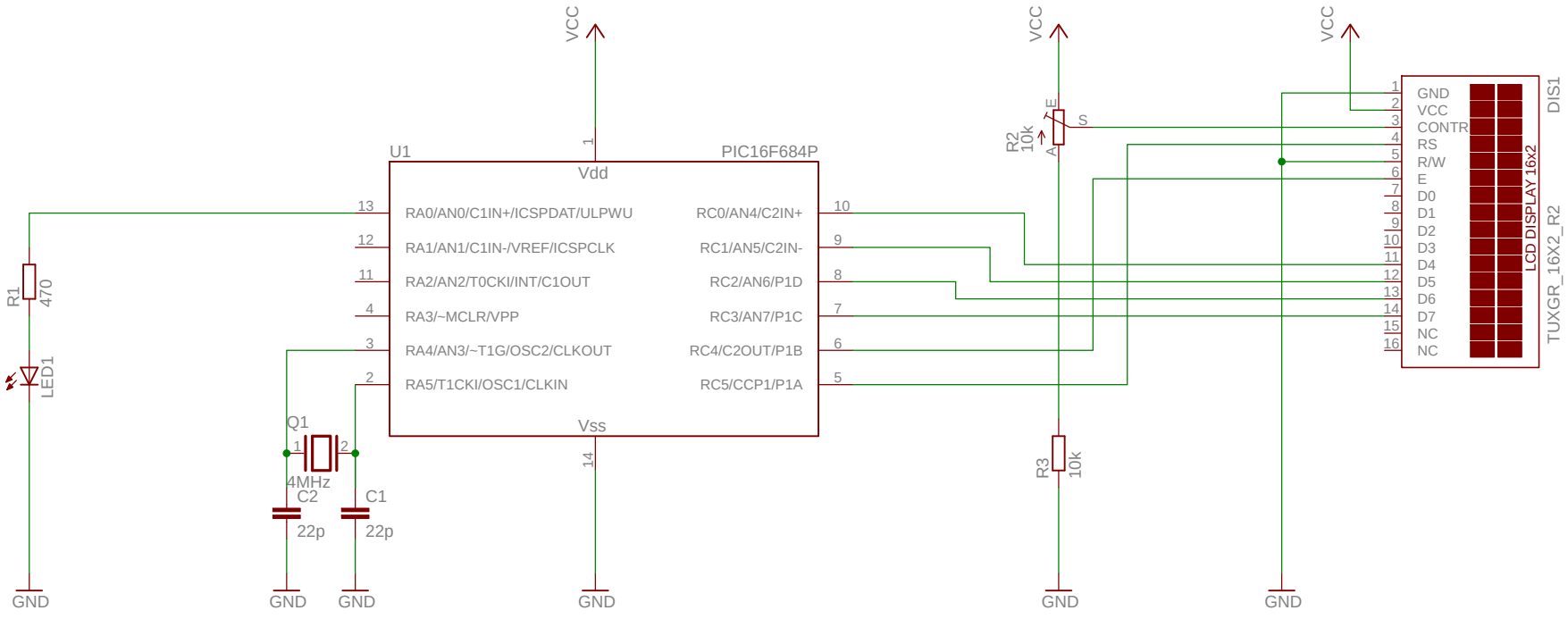

TITLE: 16F684_hello

Document Number:

REV:

Date: 14/02/2012 13:21:43

Sheet: 1/1